# EZ80

## Tracked Zero Tail Excavators

**Compact design meets powerful performance**

The EZ80 is the biggest zero tail excavator from Wacker Neuson. Compact dimensions, reduced fuel consumption and high performance are united in one machine. With a digging depth of more than 4 meters and an efficient digging power, excavation jobs are completed quickly. Working close to walls or other environmental obstacles provides no issue for this zero tail machine in any operating position. This and its compact design make the EZ80 the first choice excavator when it comes to narrow inner city job sites. On top of that the EZ80 also convinces with up to 20% less fuel consumption and thus significantly reduced operating costs.

- Precise and sensitive operation thanks to the Load Sensing Hydraulic system with LUDV (load-independent flow control).
- Programmable presets by pressing a button, jog dial control system for float volumes per attachment tool – safe and recall.
- Maintenance made easy: the tiltable cabin and the removable chassis cover provide quick and easy access, diagnostic tools offer further support.
- Meets highest quality standards: High-quality materials and excellent workmanship ensure a long service life.

# EZ80 Technical specifications

| | |
|---|---|
| **Operating data** | |
| Shipping weight min. | 7,588 kg |
| Operating weight | 7,918 - 9,208 kg |
| Biting force max. | 43.7 kN |
| Breakout force max. | 68 kN |
| Digging depth max. | 4,169 mm |
| Dumping height | 4,587 - 4,749 mm |
| Digging radius max. | 7,190 mm |
| Superstructure slewing speed | 9 1/min |
| L x W x H | 6,939 x 2,250 x 2,562 mm |
| Fuel tank capacity | 85 l |
| **Engine / Motor** | |
| Engine / Motor manufacturer | Perkins |
| Engine / Motor type | 404J-E22T |
| Engine / Motor | Water-cooled 4-cylinder turbo diesel engine |
| Emission standards stage | 5 |
| Rated performance | 42 kW |
| Displacement | 2,216 $cm^3$ |
| RPM / speed | 2,500 rpm |
| Engine performance acc. to ISO | 42 kW |
| **Battery** | |
| Battery | 88 Ah |
| **Hydraulic system** | |
| Duty pump | axial piston pump |
| Flow rate | 160 l/min |
| Operating pressure for working and traction hydraulics | 300 bar |
| Operating pressure slewing gear | 240 bar |
| Hydraulic oil tank | 92 l |
| **Undercarriage** | |
| Travel speed max. | 4.4 km/h |
| Chain width | 450 mm |
| Ground clearance | 357 mm |
| **Dozer Blade** | |
| Width | 2,250 mm |
| Height | 504 mm |
| Stroke above ground | 474 mm |
| Stroke below ground | 523 mm |
| **Sound level** | |
| Sound level (LwA) acc. to 2000/14/EC | 97 dB(A) |

| | |
|---|---|
| Cabin - specified sound pressure level LpA acc. to ISO 6394 | 79 dB(A) |

## EZ80 Dimensions

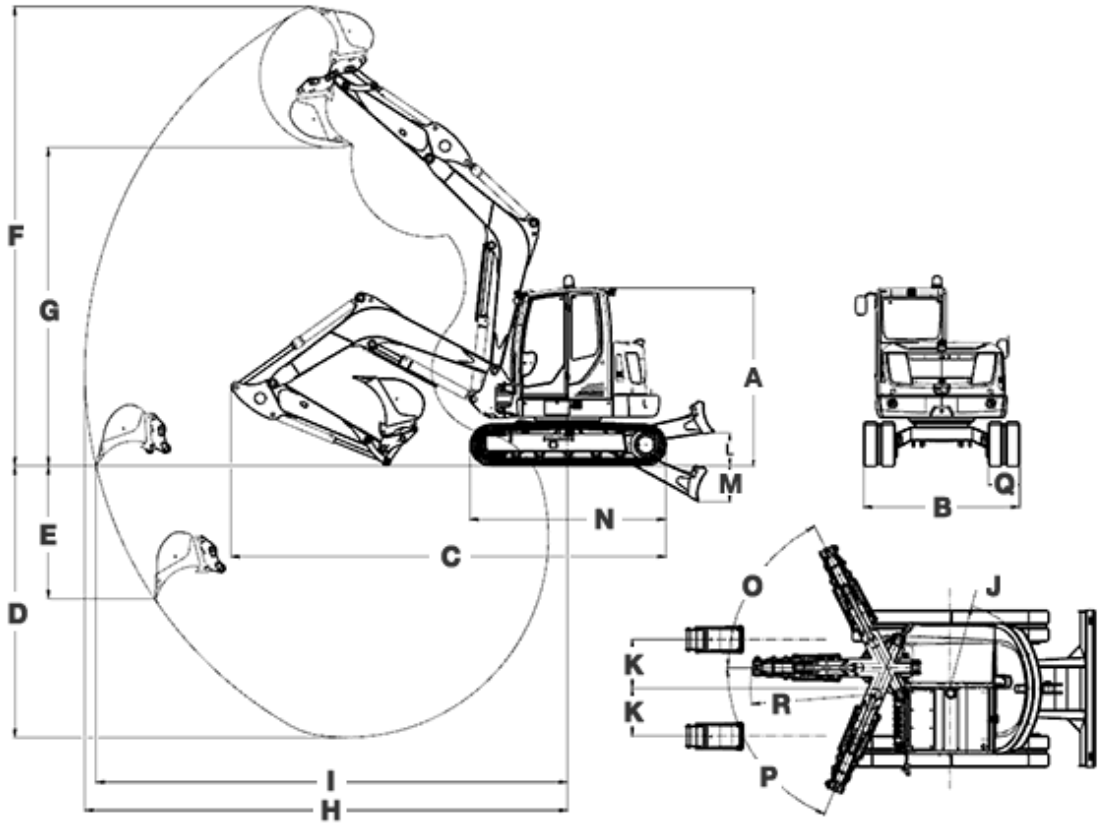


| | | short dipperstick | long dipperstick |
|---|---|---|---|
| A | Height | 2,562 mm | 2,562 mm |
| B | Width | 2,250 mm | 2,250 mm |
| B | Width of the cabin | 1,000 mm | 1,000 mm |
| B | Width of the undercarriage | 1,892 mm | 1,892 mm |
| C | Transport length | 6,939 mm | 6,944 mm |
| D | Digging depth max. max. | 3,919 mm | 4,169 mm |
| E | Insertion depth max. | 1,915 mm | 2,124 mm |
| F | Insertion height max. | 6,620 mm | 6,782 mm |
| G | Dump height max. | 4,587 mm | 4,749 mm |
| H | Digging radius max. | 6,955 mm | 7,190 mm |
| I | Range max. on the ground | 6,795 mm | 7,036 mm |
| J | Rear swivel radius w/o counterweight | 1,228 mm | 1,228 mm |
| J | Rear swivel radius with counterweight | 1,341 mm | 1,341 mm |
| K | Arm displacement max. to middle of bucket right side | 705 mm | 705 mm |
| K | Arm displacement max. to middle of bucket left side | 683 mm | 683 mm |
| L | Lift height max. levelling blade above formation | 474 mm | 474 mm |
| M | Scraping depth max. of levelling blade below formation | 523 mm | 523 mm |
| N | Length of running gear | 2,826 mm | 2,826 mm |
| O | Turning angle max. arm system to the right | 63 ° | 63 ° |

| | | | |
|---|---|---|---|
| P | Turning angle max. arm system to the left | 67 ° | 67 ° |
| Q | Width tracks | 450 mm | 450 mm |
| R | Boom slewing radius middle | 2,869 mm | 2,869 mm |
| -- | Boom slewing radius right | 2,724 mm | 2,724 mm |
| -- | Boom slewing radius left | 2,273 mm | 2,273 mm |

Please note: that product availability can vary from country to country. It is possible that information / products may not be available in your country. More detailed information on engine power can be found in the operator's manual; the stated power may vary due to specific operating conditions. Subject to alterations and errors excepted. Applicable also to illustrations.
Copyright © 2020 Wacker Neuson SE.