WL32

Wheel Loader

Versatile and powerful tool carrier

The WL32 wheel loader is the ideal partner when it comes to handling a wide range of different work tasks. It is well suited to transport material, green area maintenance with a mulcher and mower and especially snow removal services. Because of its compact dimensions, particularly the narrow width of the machine, it can be used with snowplow on sidewalks. With up to 100 l/min hydraulic output, it can efficiently operate demanding attachments such as a snow blower.

Highlights

- High hydraulic performance
- High-quality powder coating
- 100 % connectible differential lock
- The wheel loader as an attachment carrier
- Rear hydraulic connections

Technical Data

Hydraulic

Operating pressure hydraulics	210.0 bar
flow rate	56.0 l/min
tank capacity	35.0 l

Mechanical - Output Details

Travel speed	0.0 - 20.0 km/h
travel speed stage 1	0.0 - 7.0 km/h
travel speed stage 2	0.0 - 20.0 km/h

Mechanical Details

Operating weight	3,400.0 kg
Bucket capacity	0.45 m3

Engine

Cooling	Water-cooling
Cylinder	4.0
Cylinder capacity	2,216.0 cm3
Tank capacity	65.0 l
Operating power	36.3 KW
Operating Engine speed	2,800.0 kg/m2s
Starter battery Voltage	12.0 %(V)
Battery capacity (nom. value)	95.0 cos φ
Engine Manufacturer	Perkins
Engine Designation	404 D-22

Environment Data

Sound level LpA	82.0 kg/m

Operating Fluids

Hydraulic fluid volume	35.0 l

Chassis

Steering angle max.	45
Brake	Surge brake
axle	Planetary axle
Traction drive	Hydrostatic
hydraulikpump	Displacement pump
operating pressure	450.0 bar
flow rate	56.0 l/min

The illustrations, equipment and data shown may deviate from the current delivery program of your country. Optional equipment subject to additional charge may be shown. Subject to changes.

Copyright © 2024 Wacker Neuson SE | www.wackerneuson.com

Dimensions

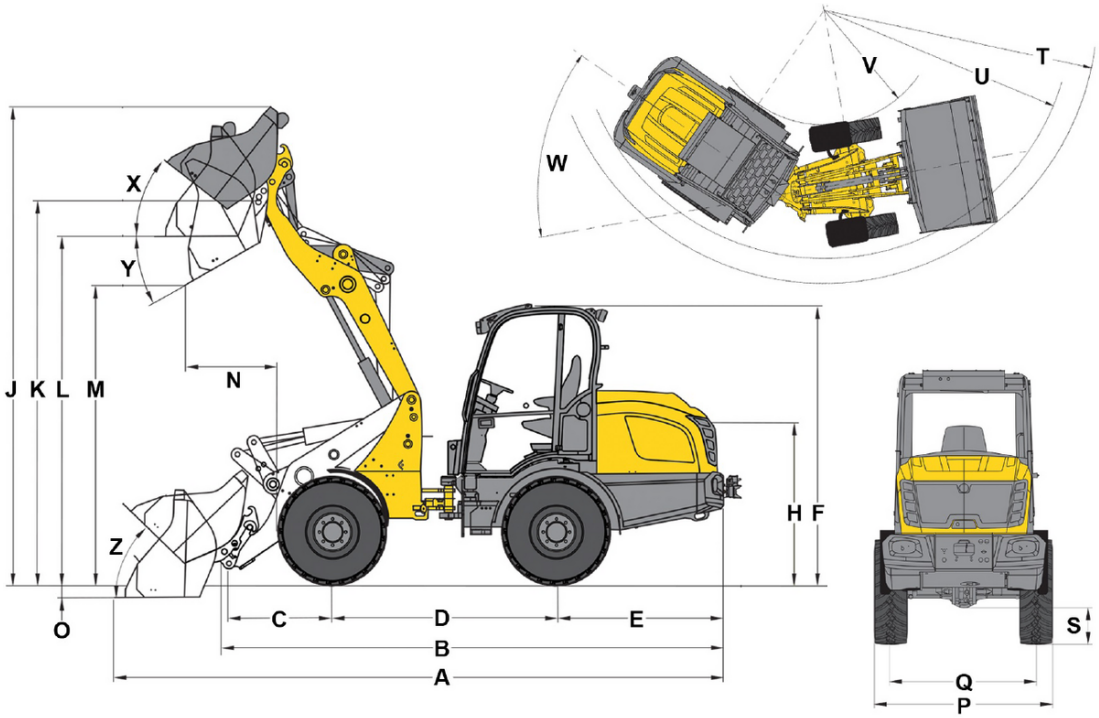

A	Total length	4,715 mm
B	Total length without bucket	4,022 mm
C	Bucket pivot point (to center of axle)	675 mm
D	Wheel base	1,952 mm
E	Rear overhang	1,290 mm
F	Height with operator's canopy (fixed)	2,351 mm
	Height with cab	2,351 mm
H	Seat height	1,354 mm
J	Total working height	3,948 mm
K	Bucket pivot point (max. lift height)	3,208 mm
L	Load-over height	2,890 mm
M	Dumping height	2,300 mm
N	Reach (at M)	265 mm
O	Digging depth	123 mm
P	Total width	1,414 mm
Q	Track width	1,014 mm
S	Ground clearance	275 mm
T	Maximum radius	3,447 mm
U	Radius on the outer edge	3,171 mm
V	Inner radius	1,731 mm
W	Articulation angle	45 °
X	Rollback angle at max. lift height	56 °
Y	Dumping angle	37 °
Z	Rollback angle on ground	46 °

The illustrations, equipment and data shown may deviate from the current delivery program of your country. Optional equipment subject to additional charge may be shown. Subject to changes.

Copyright © 2024 Wacker Neuson SE | www.wackerneuson.com