WL44

Wheel Loader

Durable and productive

With the entry-level models by Wacker Neuson, you don't have to do without – especially when it comes to performance. The durable and sophisticated technology of the WL44 wheel loader has proven itself in many applications. This makes it a particularly reliable performance machine in volume business – a cost-benefit calculation that works out. The WL44 is the perfect machine for material transport.

Highlights

- High productivity thanks to the low front carriage
- Maximum traction thanks to articulated pendulum joint
- High-quality powder coating
- 100 % connectible differential lock
- Easy entry and exit

Technical Data

Standard engine data

Engine manufacturer	Deutz
Motor type	TD 2.9 L4 S5
Cylinder	4
Drive output	45 kW
Drive output	61 PS
at max. rpm	2,300 U/min
Cylinder capacity	2,900 cm³
Type of coolant	Water
Exhaust standard level	V
Exhaust aftertreatment	DOC/DPF
Average sound power level LwA (operator's canopy)	99.4 dB(A)
Guaranteed sound power level LwA (operator's canopy)	101 dB(A)
Specified sound pressure level LpA (operator's canopy)	84 dB(A)
Average sound power level LwA (cabin)	99.4 dB(A)
Guaranteed sound power level LwA (cabin)	101 dB(A)
Specified sound pressure level LpA (cabin)	80 dB(A)

Engine data Option 1

Engine manufacturer	Deutz
Motor type	TCD 2.9 L4 S5
Cylinder	4
Drive output	55.4 kW
Drive output	75 PS
at max. rpm	2,300 U/min
Cylinder capacity	2,900 cm³
Type of coolant	Water/charge air
Exhaust standard level	V
Exhaust aftertreatment	DOC/DPF
Average sound power level LwA (operator's canopy)	99.2 dB(A)
Guaranteed sound power level LwA (operator's canopy)	100 dB(A)
Specified sound pressure level LpA (operator's canopy)	85 dB(A)
Average sound power level LwA (cabin)	99.2 dB(A)
Guaranteed sound power level LwA (cabin)	100 dB(A)
Specified sound pressure level LpA (cabin)	80 dB(A)

Electrical system

Operating voltage	12 V
Battery	100 Ah
Alternator	85 A

Weights

Bucket capacity (standard bucket)	0.80 m³
Operating weight	4,600 kg
Tipping load with bucket – machine straight, loading frame horizontal	3,200 - 3,327 kg

The illustrations, equipment and data shown may deviate from the current delivery program of your country. Optional equipment subject to additional charge may be shown. Subject to changes.

Copyright © 2024 Wacker Neuson SE | www.wackerneuson.com

Tipping load with bucket – machine pivoted, loading frame horizontal	2,736 - 2,845 kg
Tipping load with pallet fork – machine straight, loading frame horizontal	2,478 - 2,562 kg
Tipping load with pallet fork – machine pivoted, loading frame horizontal	2,126 - 2,204 kg

Driver's cab

Driver's cab	FSD (cabin)

Filling levels

Tank capacity for fuel	82 l
Tank capacity for hydraulic oil	66 l

Drive system

Type of drive	Hydrostatic
drive unit	universal joint shaft
Speed levels	2
Axle	PA 1400 (PA 1422)
Travel speed Standard	0-20 km/h
Travel speed Option 1	0-30 km/h
Operating brake	Hydrostatic drive system acting on all 4 wheels (wear-free)
Parking brake	Service and parking brake in the drive train acts on all 4 wheels
Differential lock	100 % front axle + rear axle

Hydraulic system

Drive hydraulics working pressure (max.)	450 bar
Work hydraulics discharge volume (max.)	64,4 (74-115) l/min
Work hydraulics working pressure (max.)	220 bar

Kinematics

Kinematics type	Z
Lifting cylinder	2
Tipping cylinder	1
Quick change system	hydraulic

Steering

Steering type	hydraulically activated articulated pendulum steering
Steering cylinder	1
Oscillating angle	±12 degree

Other information

FSD = overhead guard
DPF = diesel particulate filter
DOC = diesel oxidation catalyst
SCR = selective catalytic reduction
Tipping load calculation pursuant to ISO 14397

The illustrations, equipment and data shown may deviate from the current delivery program of your country. Optional equipment subject to additional charge may be shown. Subject to changes.

Copyright © 2024 Wacker Neuson SE | www.wackerneuson.com

Dimensions

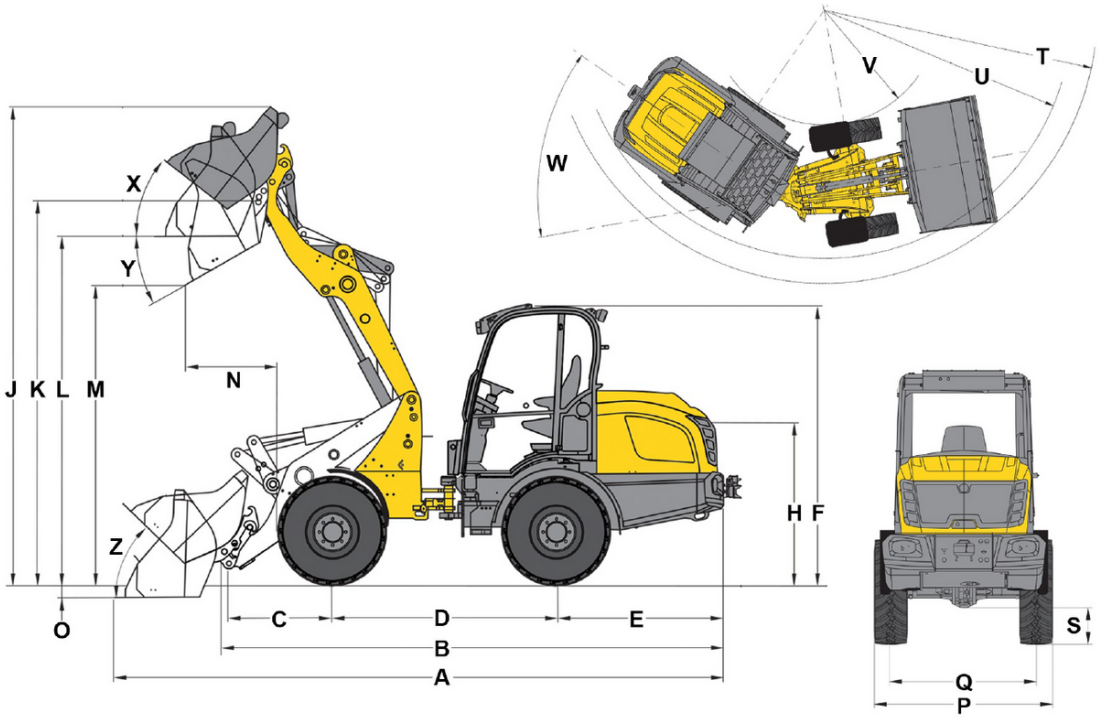

A	Total length	5,420 mm
B	Total length without bucket	4,760 mm
C	Bucket pivot point (to center of axle)	1,040 mm
D	Wheel base	2,110 mm
E	Rear overhang	1,530 mm
F	Height with lowered operator's canopy	2,332 mm
	Height with operator's canopy raised	2,470 mm
	Height with cab raised	2,528 mm
H	Seat height	1,470 mm
J	Total working height	3,890 mm
K	Bucket pivot point (max. lift height)	3,200 mm
L	Load-over height	2,940 mm
M	Dumping height	2,430 mm
N	Reach (at M)	665 mm
O	Digging depth	136 mm
P	Total width	1,830 mm
Q	Track width	1,500 mm
S	Ground clearance	367 mm
T	Maximum radius	4,270 mm
U	Radius on the outer edge	3,870 mm
V	Inner radius	1,990 mm
W	Articulation angle	40 °
X	Rollback angle at max. lift height	71 °
Y	Dumping angle	45 °
Z	Rollback angle on ground	43 °

The illustrations, equipment and data shown may deviate from the current delivery program of your country. Optional equipment subject to additional charge may be shown. Subject to changes.

Copyright © 2024 Wacker Neuson SE | www.wackerneuson.com