WL54

Wheel Loader

Robust design and impressive performance

The efficient WL54 wheel loader offers an impressive high economic efficiency and power. It maneuvers quickly, saving time, thus offering first-class work performance. The wheel loader WL54 achieves this with its high lifting and breakout forces as well as high stability – all at a convincing price-performance ratio.

Highlights

- Maximum traction thanks to articulated pendulum joint
- High-quality powder coating
- 100 % connectible differential lock
- High hydraulic performance
- Large lifting height

Technical Data

Standard engine data

Engine manufacturer	Deutz
Motor type	TCD 2.9 L4 S5
Cylinder	4
Drive output	55.4 kW
Drive output	75 PS
at max. rpm	2,300 U/min
Cylinder capacity	2,900 cm³
Type of coolant	Water/charge air
Exhaust standard level	V
Exhaust aftertreatment	DOC/DPF

Electrical system

Operating voltage	12 V
Battery	100 Ah
Alternator	85 A

Weights

Bucket capacity (standard bucket)	0.90 m³
Operating weight	5,800 kg
Tipping load with bucket – machine straight, loading frame horizontal	3,270 - 3,583 kg
Tipping load with bucket – machine pivoted, loading frame horizontal	2,761 - 3,045 kg
Tipping load with pallet fork – machine straight, loading frame horizontal	3,035 - 3,270 kg
Tipping load with pallet fork – machine pivoted, loading frame horizontal	2,599 - 2,813 kg

Driver's cab

Driver's cab	FSD (cabin)

Filling levels

Tank capacity for fuel	82 l
Tank capacity for hydraulic oil	66 l

Drive system

Type of drive	Hydrostatic
drive unit	universal joint shaft
Speed levels	2
Axle	PA 1422
Travel speed Standard	0-20 km/h
Travel speed Option 1	0-30 km/h
Operating brake	Hydrostatic drive system acting on all 4 wheels (wear-free)
Parking brake	Service and parking brake in the drive train acts on all 4 wheels
Differential lock	100 % front axle + rear axle

Hydraulic system

Drive hydraulics working pressure (max.)	445 bar
Work hydraulics discharge volume (max.)	64 (74-115) l/min
Work hydraulics working pressure (max.)	210 bar

The illustrations, equipment and data shown may deviate from the current delivery program of your country. Optional equipment subject to additional charge may be shown. Subject to changes.

Copyright © 2024 Wacker Neuson SE | www.wackerneuson.com

Kinematics

Kinematics type	Z
Lifting cylinder	2
Tipping cylinder	1
Quick change system	hydraulic

Steering

Steering type	hydraulically activated articulated pendulum steering
Steering cylinder	1
Oscillating angle	±12 degree

Noise characteristic values

Average sound power level LwA (operator's canopy)	99.9 dB(A)
Guaranteed sound power level LwA (operator's canopy)	101 dB(A)
Specified sound pressure level LpA (operator's canopy)	84 dB(A)
Average sound power level LwA (cabin)	99.9 dB(A)
Guaranteed sound power level LwA (cabin)	101 dB(A)
Specified sound pressure level LpA (cabin)	80 dB(A)

Other information

FSD = overhead guard
DPF = diesel particulate filter
DOC = diesel oxidation catalyst
SCR = selective catalytic reduction
Tipping load calculation pursuant to ISO 14397

The illustrations, equipment and data shown may deviate from the current delivery program of your country. Optional equipment subject to additional charge may be shown. Subject to changes.

Copyright © 2024 Wacker Neuson SE | www.wackerneuson.com

Dimensions

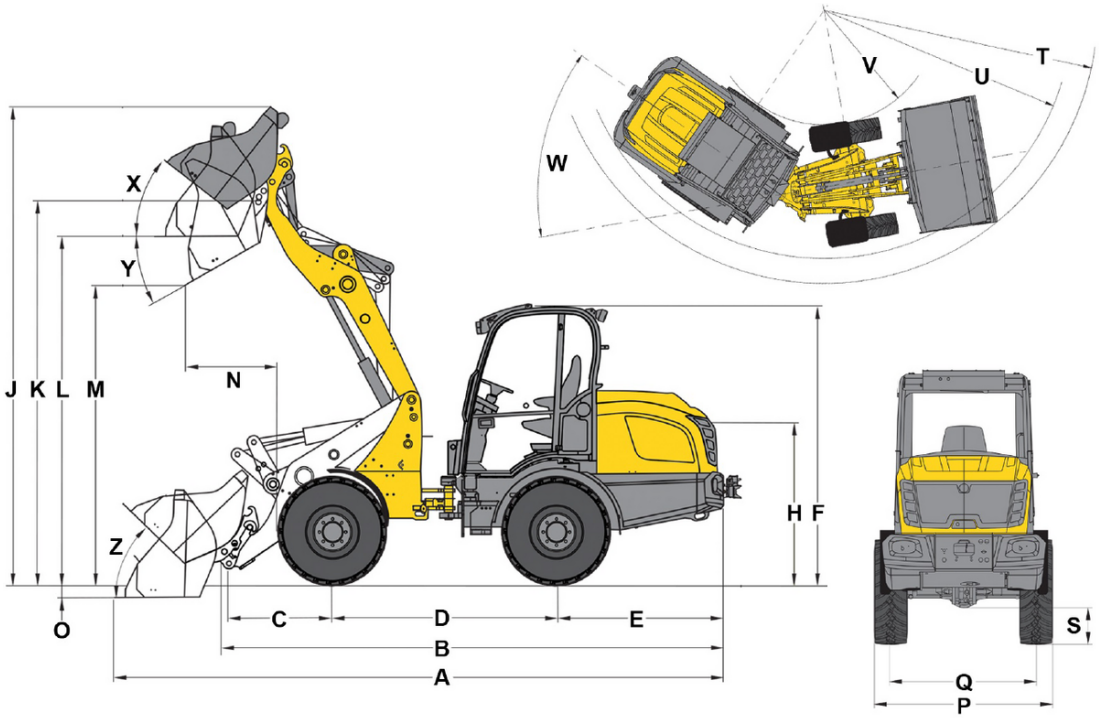

A	Total length	5,760 mm
B	Total length without bucket	4,828 mm
C	Bucket pivot point (to center of axle)	991 mm
D	Wheel base	2,150 mm
E	Rear overhang	1,531 mm
F	Height with operator's canopy raised	2,495 mm
	Height with cab raised	2,553 mm
H	Seat height	1,495 mm
J	Total working height	4,561 mm
K	Bucket pivot point (max. lift height)	3,671 mm
L	Load-over height	3,335 mm
M	Dumping height	2,864 mm
N	Reach (at M)	870 mm
O	Digging depth	114 mm
P	Total width	1,847 mm
Q	Track width	1,522 mm
S	Ground clearance	352 mm
T	Maximum radius	4,242 mm
U	Radius on the outer edge	3,785 mm
V	Inner radius	1,674 mm
W	Articulation angle	42 °
X	Rollback angle at max. lift height	38 °
Y	Dumping angle	28 °
Z	Rollback angle on ground	44 °

The illustrations, equipment and data shown may deviate from the current delivery program of your country. Optional equipment subject to additional charge may be shown. Subject to changes.

Copyright © 2024 Wacker Neuson SE | www.wackerneuson.com