WL70

Wheel Loader

The powerhouse

Thanks to cutting-edge engine technology in accordance with the most current emission standard, the WL70 wheel loader offers an extremely efficient but still high-performance engine, making this machine a powerhouse in application. This is supported by a very sturdy load arm design. Lift height and engine output are at the top of the 7 t wheel loader class. This makes quick and efficient material handling possible. The 40 km/h option also allows the machine to be relocated quickly and is thus flexible and efficient in application.

Highlights

- {30/40 km/h}{18.64/24.85 mph} speed
- The wheel loader as an attachment carrier
- Clear 3.5-inch digital display
- Comfortable working environment
- Joystick console spring-mounted on the operator's seat

Technical Data

Standard engine data

Engine manufacturer	Perkins
Motor type	904J-E36TA
Cylinder	4
Drive output	100 kW
Drive output	136 PS
at max. rpm	2,200 U/min
Cylinder capacity	3,621 cm³
Type of coolant	Water/charge air
Exhaust standard level	V
Exhaust aftertreatment	DOC/DPF/SCR

Electrical system

Operating voltage	12 V
Battery	135 Ah
Alternator	85 A

Weights

Bucket capacity (standard bucket)	1.10 m³
Operating weight	7,140 kg
Tipping load with bucket – machine straight, loading frame horizontal	4,762 kg
Tipping load with bucket – machine pivoted, loading frame horizontal	3,926 kg
Tipping load with pallet fork – machine straight, loading frame horizontal	4,254 kg
Tipping load with pallet fork – machine pivoted, loading frame horizontal	3,559 kg

Driver's cab

Driver's cab	Cab

Filling levels

Tank capacity for fuel	105 l
Tank capacity for hydraulic oil	95 l
Tank capacity for urea solution	19 l

Drive system

Type of drive	Hydrostatic
drive unit	universal joint shaft
Speed levels	2
Axle	PA 1422/2
Travel speed Standard	0-20 km/h
Travel speed Option 1	0-30 km/h
Travel speed Option 2	0-40 km/h
Operating brake	Disc brake (combined with parking brake)
Parking brake	Service and parking brake in the drive train acts on all 4 wheels
Differential lock	100 % front axle + rear axle

The illustrations, equipment and data shown may deviate from the current delivery program of your country. Optional equipment subject to additional charge may be shown. Subject to changes.

Copyright © 2024 Wacker Neuson SE | www.wackerneuson.com

Hydraulic system

Drive hydraulics working pressure (max.)	455 bar
Work hydraulics discharge volume (max.)	100 (115-150) l/min
Work hydraulics working pressure (max.)	210 bar

Kinematics

Kinematics type	Z
Lifting cylinder	2
Tipping cylinder	1
Quick change system	hydraulic

Steering

Steering type	hydraulically activated articulated pendulum steering
Steering cylinder	2
Oscillating angle	±12 degree

Noise characteristic values

Average sound power level LwA (cabin)	101.4 dB(A)
Guaranteed sound power level LwA (cabin)	103 dB(A)
Specified sound pressure level LpA (cabin)	74 dB(A)

Other information

FSD = overhead guard
DPF = diesel particulate filter
DOC = diesel oxidation catalyst
SCR = selective catalytic reduction
Tipping load calculation pursuant to ISO 14397

The illustrations, equipment and data shown may deviate from the current delivery program of your country. Optional equipment subject to additional charge may be shown. Subject to changes.

Copyright © 2024 Wacker Neuson SE | www.wackerneuson.com

Dimensions

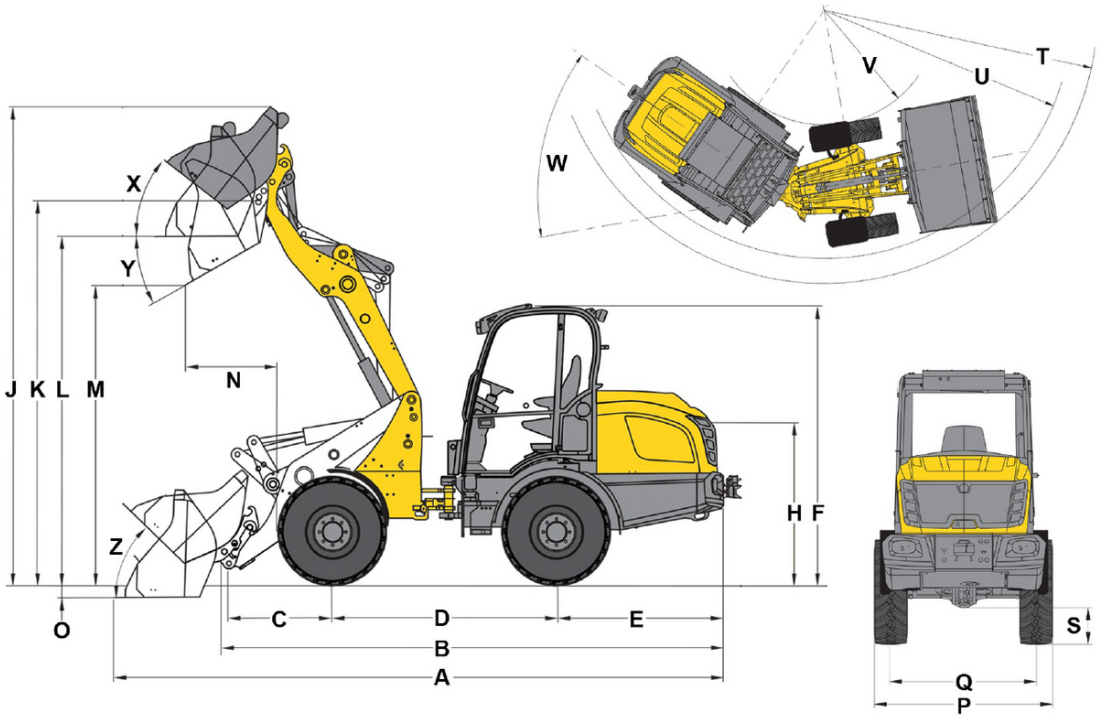

A	Total length	5,898 mm
B	Total length without bucket	4,780 mm
C	Bucket pivot point (to center of axle)	991 mm
D	Wheel base	2,150 mm
E	Rear overhang	1,676 mm
F	Height with cab	2,693 mm
H	Seat height	1,609 mm
J	Total working height	4,536 mm
K	Bucket pivot point (max. lift height)	3,686 mm
L	Load-over height	3,375 mm
M	Dumping height	2,840 mm
N	Reach (at M)	850 mm
O	Digging depth	74 mm
P	Total width	1,829 mm
Q	Track width	1,422 mm
S	Ground clearance	375 mm
T	Maximum radius	4,341 mm
U	Radius on the outer edge	3,686 mm
V	Inner radius	1,666 mm
W	Articulation angle	42 °
X	Rollback angle at max. lift height	33 °
Y	Dumping angle	33 °
Z	Rollback angle on ground	39 °

The illustrations, equipment and data shown may deviate from the current delivery program of your country. Optional equipment subject to additional charge may be shown. Subject to changes.

Copyright © 2024 Wacker Neuson SE | www.wackerneuson.com